MADİSAN

PRODUCT CATALOGUE 2026

Gears, Power Transmission & Pump Systems

Precision components engineered and manufactured to your requirements.

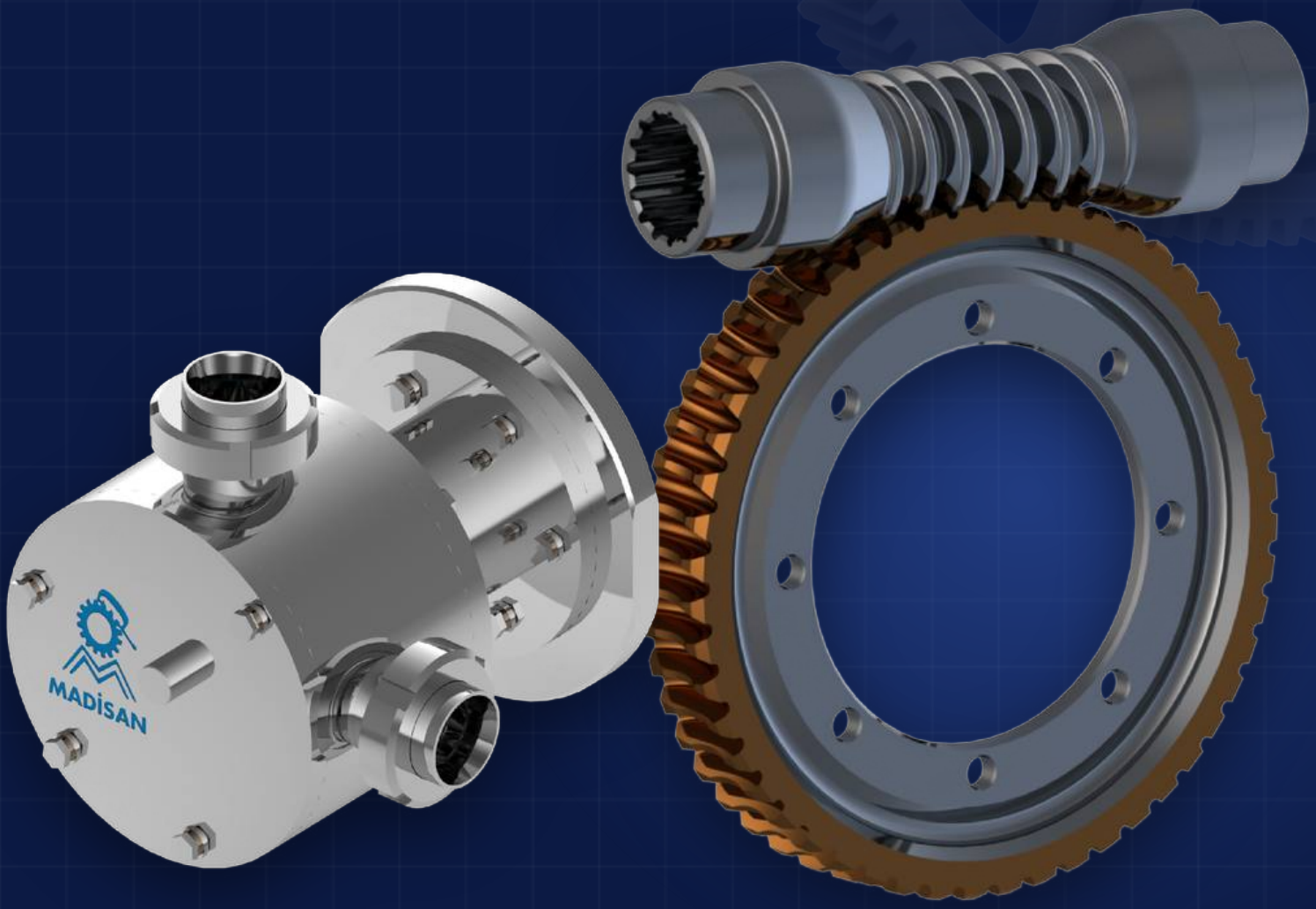

GEARS GEARBOXES CAMS & SCREWS PUMPS MOULDS & DIES CNC MACHINING

ABOUT MADISAN

Precision in every tooth.

Madisan manufactures gears, power transmission components, pump systems and precision tooling for industrial customers.

Our portfolio spans spur, helical, bevel and worm gears, complete gearboxes, cam mechanisms, gear, lobe, centrifugal and vacuum pumps, moulds and dies. Parts are produced to customer drawings, samples or 3D models — in metals and high-performance engineering plastics.

30+
PRODUCT GROUPS

5
PUMP SERIES

7
MATERIAL FAMILIES

WHAT WE DO

01
Gear Manufacturing
Spur, helical, bevel, worm, internal and special-profile gears.

02
Power Transmission
Gearboxes, planetary sets, cams, lead screws and augers.

03
Pump Systems
MDP-C, MIP, MLP, MSP-C and MSHVP-P pump series.

04
Moulds & Dies
Pattern moulds, extrusion dies and press tooling.

05
Precision Machining
CNC-turned and milled parts made to drawing.

06
Repair & Overhaul
Gearbox repair and re-manufacture of worn parts.

MATERIALS

- Carbon & alloy steels
- Stainless steel
- Aluminium
- Bronze & brass
- Cast polyamide (PA6)
- POM (acetal)
- PEEK

HOW WE WORK

01
Your input
Drawing, sample or 3D model

02
Engineering
Design review & 3D CAD

03
Manufacturing
Machining, gear cutting & assembly

04
Delivery
Inspection & shipment

CONTENTS

Product Range

Gears 04

01 Spur Gears 05
02 Helical Gears 06
03 Herringbone Gears 06
04 Straight Bevel Gears 07
05 Spiral Bevel Gears 07
06 Worm Gear Sets 08
07 Composite Gears 08
08 Sprockets 09
09 Timing Pulleys 10
10 Point-Contact Drive Mechanisms 10
11 Internal Ring Gears 11
12 Planetary Gear Sets 11
13 Spline & Drive Shafts 12
14 Differential Gear Sets 12
15 Gear Racks 13
16 Sector Gears 13
17 Clutch Gears 14
18 Ratchet Gears 14
19 Anti-Backlash Gears 14

Power Transmission & Motion 15

20 Gearboxes & Transmissions 16
21 Gearbox Repair & Overhaul 17
22 Lead Screws 18
23 Cam Mechanisms 18
24 Cylindrical Cams 19
25 Augers & Screw Components 20

Pump Systems 21

26 External Gear Pumps 22
27 Internal Gear Pumps 23
28 Rotary Lobe Pumps 24
29 Centrifugal Pumps 25
30 Liquid Ring Vacuum Pumps 26

Tooling & Machining 27

31 Pattern Moulds 28
32 Extrusion Dies 29
33 Press Dies 29
34 Custom Machined Parts 30
35 Housings, Brackets & Assemblies 31

MADİSAN

SECTION 01

Gears

From small-module pinions to large ring gears — spur, helical, bevel, worm and special-profile gears in steel, stainless steel, bronze and engineering plastics, produced to drawing, sample or 3D model.

01	Spur Gears	05
02	Helical Gears	06
03	Herringbone Gears	06
04	Straight Bevel Gears	07
05	Spiral Bevel Gears	07
06	Worm Gear Sets	08
07	Composite Gears	08
08	Sprockets	09
09	Timing Pulleys	10
10	Point-Contact Drive Mechanisms	10
11	Internal Ring Gears	11
12	Planetary Gear Sets	11
13	Spline & Drive Shafts	12
14	Differential Gear Sets	12
15	Gear Racks	13
16	Sector Gears	13
17	Clutch Gears	14
18	Ratchet Gears	14
19	Anti-Backlash Gears	14

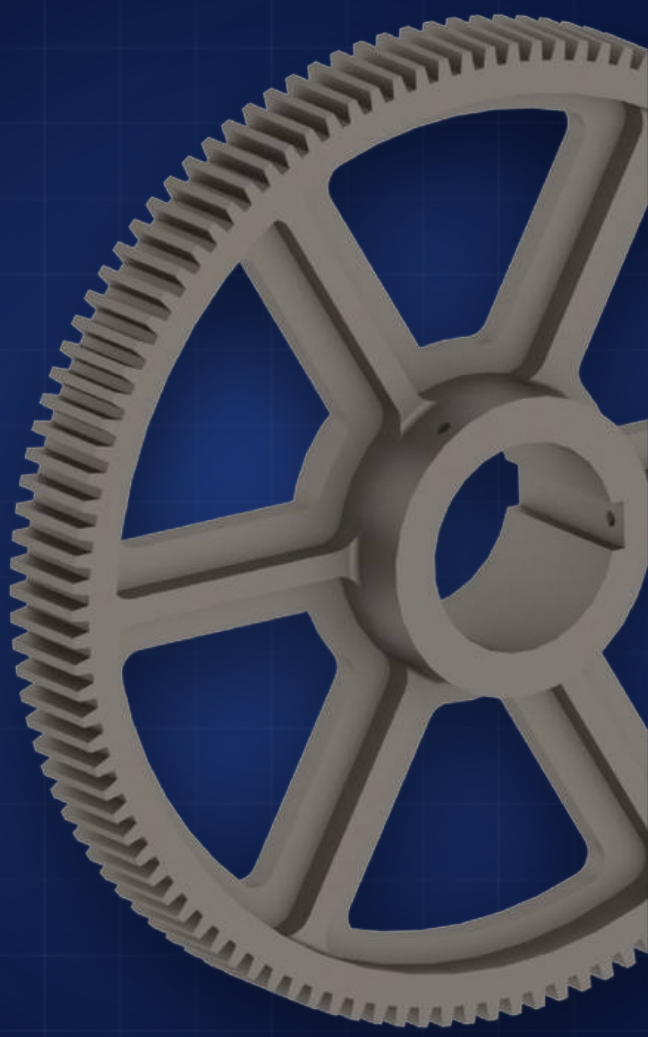

01 GEARS
Spur Gears

Straight-cut gears for parallel shafts — the most widely used gear type for efficient, reliable power transmission. Supplied as pinions, hubbed gears, large ring gears and lightweight designs with lightening holes, in steel, stainless steel and engineering plastics.

TYPICAL APPLICATIONS

- Conveyors & material handling
- Machine tools
- Agricultural machinery
- Packaging machinery

Spur Gear with Lightening Holes

Spoked Spur Gear

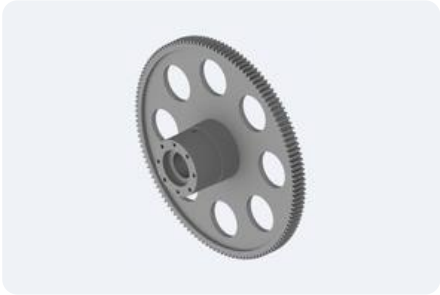

Large Spur Gear with Hub

Steel Spur Pinion

Small-Module Spur Gears

Flanged Spur Gear Hub

Large Ring Gear PA6

Thin-Section Ring Gear PA6

Gear with Splined Bore PEEK

02

GEARS

Helical Gears

Angled teeth engage gradually, giving smoother, quieter running and a higher load capacity than spur gears — ideal for high-speed drives.

Helical Pinion, Splined Bore

Helical Gear

Integral Gear Shaft

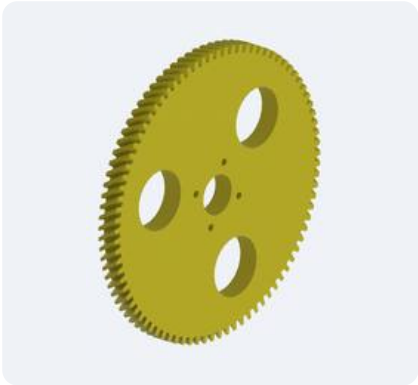

Large Gear with Cut-Outs

PA6

TYPICAL APPLICATIONS

- Gearboxes & speed reducers
- Pumps & compressors
- High-speed drives

Herringbone (Double Helical) Gear

03

GEARS

Herringbone Gears

Double-helical gears whose opposing tooth angles cancel axial thrust — carrying high loads at speed without the need for thrust bearings.

TYPICAL APPLICATIONS

- Heavy-duty gearboxes
- Rolling mills & crushers
- High-torque drives

04

GEARS

Straight Bevel Gears

Cone-shaped gears that transmit motion between intersecting shafts, typically at 90° — a robust, economical solution for right-angle drives.

Straight Bevel Gear Pair

Straight Bevel Gears

TYPICAL APPLICATIONS

- Differentials
- Right-angle drives
- Agricultural equipment

Crown Wheel & Pinion Set

Spiral Bevel Set — Rear View

05

GEARS

Spiral Bevel Gears

Crown Wheel & Pinion

Curved-tooth bevel gear sets with a higher contact ratio, for quieter operation and greater torque capacity in right-angle drives.

TYPICAL APPLICATIONS

- Axle & final drives
- Tractors & off-road vehicles
- Right-angle gearboxes

06

GEARS

Worm Gear Sets

A worm and wheel pair achieves a high reduction ratio in a single compact stage, with smooth, quiet running and self-locking capability in suitable ratios.

Worm & Worm Wheel Set

Hollow Worm & Wheel

Worm Shaft & Wheel

TYPICAL APPLICATIONS

- Lifting & hoisting
- Slewing drives & positioners
- Conveyors
- Valve actuators

Lightweight Bevel Ring Gear

07

GEARS

Composite Gears

Hybrid gears that combine a metal hub with a polymer or lightweight toothed body — reducing weight, noise and wear while keeping a strong, precise shaft connection.

Polymer Gear, Steel Hub

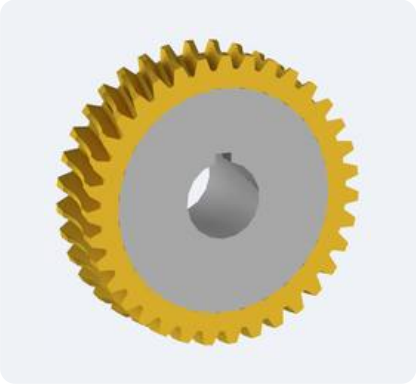

Hybrid Gear — Face View

TYPICAL APPLICATIONS

- Food & packaging machinery
- Automation equipment
- Low-noise drives

08 GEARS
Sprockets

Roller-chain sprockets in simplex, duplex and triplex designs — plate, hubbed and bolt-on types, machined to standard chain pitches or custom tooth profiles.

TYPICAL APPLICATIONS

- Chain conveyors
- Agricultural machinery
- Food processing lines
- Drive systems

Duplex Sprocket

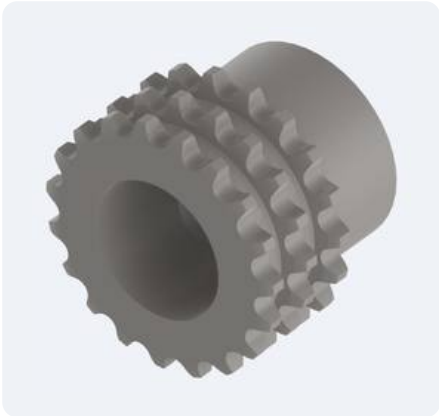

Triplex Sprocket

Plate Sprocket with Hub

Hubbed Sprocket

Bolt-On Plate Sprocket

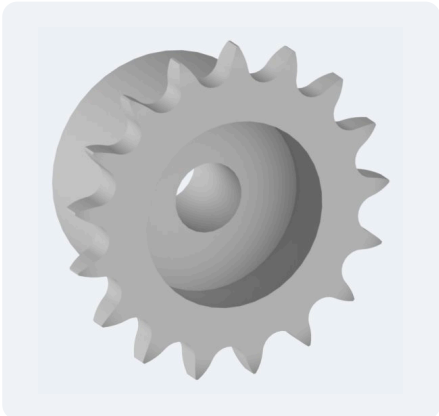

Simplex Sprocket

09

GEARS

Timing Pulleys

Toothed pulleys for synchronous belt drives — slip-free, precisely timed power transmission with low noise and no lubrication.

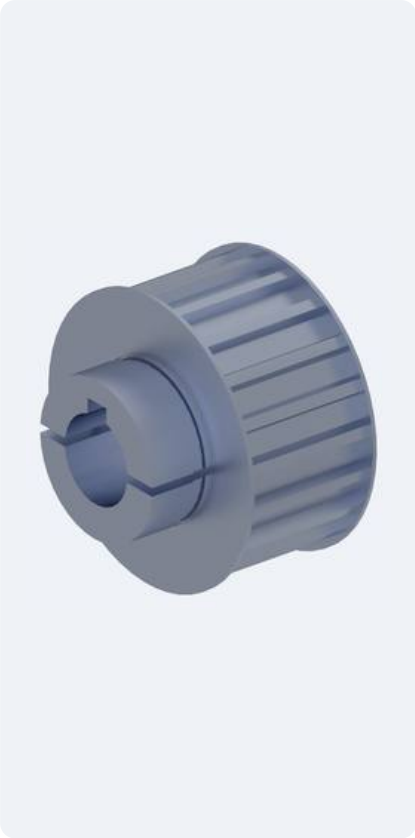

Timing Pulley with Keyway

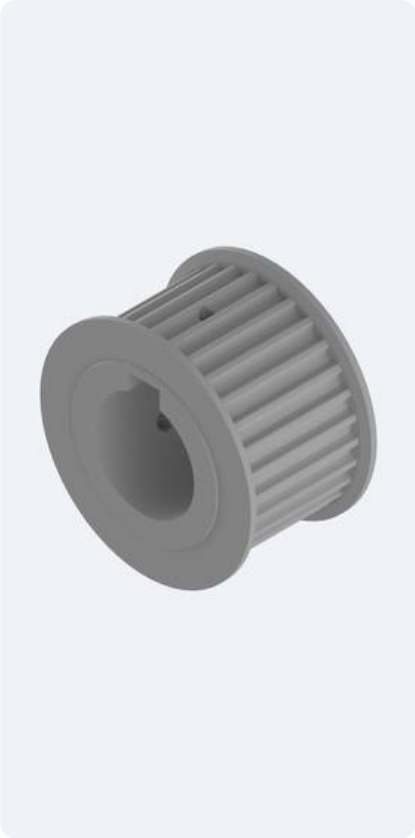

Flanged Timing Pulley

TYPICAL APPLICATIONS

- Automation & robotics
- CNC machines
- Printing & packaging

Round-Tooth Drive Wheel

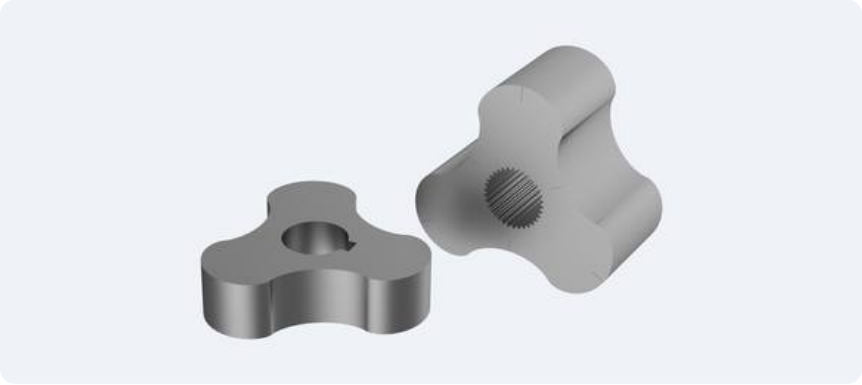

Tri-Lobe Rotors

10

GEARS

Point-Contact Drive Mechanisms

Special drive elements with rounded tooth and lobe profiles that roll against their mating part at a single contact point — for smooth indexing and low-wear transmission.

TYPICAL APPLICATIONS

- Indexing drives
- Rotary lobe pumps
- Special machinery

11

GEARS

Internal Ring Gears

Ring gears with teeth cut on the inside diameter, forming compact coaxial drives together with pinions and planet gears.

Internal Ring Gear

Internal Gear Ring

Ring Gear & Pinion Shaft

TYPICAL APPLICATIONS

- Planetary gearboxes
- Slewing rings
- Hydraulic motors & pumps

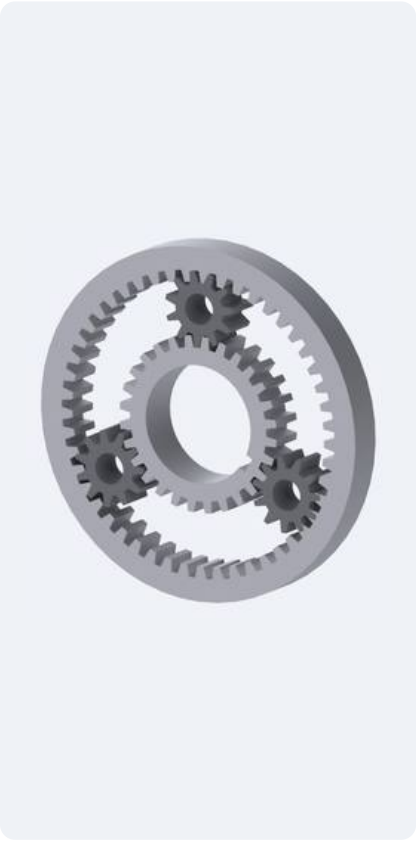

Planetary Gear Set

Five-Planet Gear Set

Planetary Set — Angled

12

GEARS

Planetary Gear Sets

Sun, planet and ring gear assemblies delivering high torque density and high reduction ratios in a compact, coaxial package.

TYPICAL APPLICATIONS

- Servo & precision gearboxes
- Winches & track drives
- Mixers & agitators

13

GEARS

Spline & Drive Shafts

Splined shafts, hubs and bushings that transmit torque while allowing axial movement — along with PTO shafts and cardan shafts with universal joints.

Spline Shaft & Hub

Splined PTO Shaft

Splined Bushing

Cardan Shaft

TYPICAL APPLICATIONS

- Power take-off (PTO) drives
- Agricultural implements
- Gearbox input & output shafts

Differential Spider Gear Kit

Torque-Sensing Differential Parts

14

GEARS

Differential Gear Sets

Bevel and worm-type differential gear sets that split torque between two outputs while allowing them to turn at different speeds.

TYPICAL APPLICATIONS

- Automotive & motorsport
- Off-road & agricultural vehicles
- Industrial drives

15

GEARS

Gear Racks

Straight and round racks that turn the rotation of a pinion into linear motion — in standard lengths or custom profiles with mounting holes.

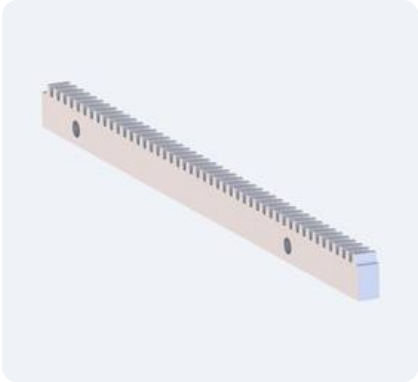

Precision Gear Rack

Heavy-Duty Rack Segment

Round Rack

Long Linear Rack

TYPICAL APPLICATIONS

- Linear axes & gantries
- Sliding gates & doors
- Lifting tables

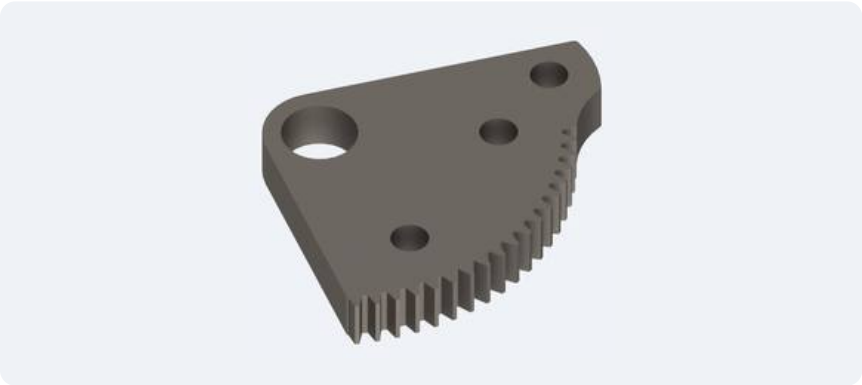

Sector Gear

Toothed Lever Segment

16

GEARS

Sector Gears

Partial gears and toothed levers for limited-angle rotation, where a full gear is not required — saving both space and weight.

TYPICAL APPLICATIONS

- Steering & tilting mechanisms
- Agricultural implements
- Levers & linkages

17 GEARS
Clutch Gears

Toothed clutch rings and face gears that engage and disengage drives positively, transmitting torque without slip.

TYPICAL APPLICATIONS

- Shiftable gearboxes
- Machine tool drives
- Couplings

Toothed Clutch Rings

Face Clutch Gears

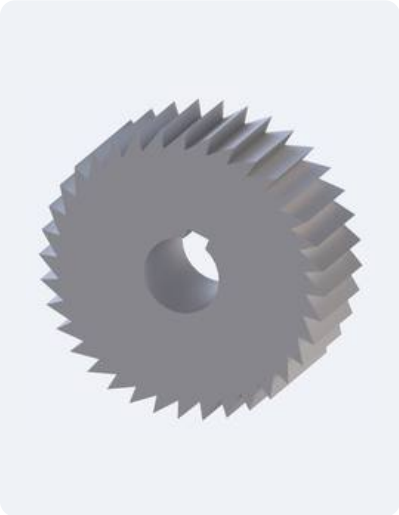

Ratchet Gear

Ratchet Disc

18 GEARS
Ratchet Gears

Ratchet wheels that allow rotation in one direction only, locking reliably against reverse motion when engaged with a pawl.

TYPICAL APPLICATIONS

- Winches & hoists
- Tensioners
- Indexing mechanisms

19 GEARS
Anti-Backlash Gears

Spring-preloaded split gears that take up tooth clearance, eliminating backlash for precise, repeatable positioning.

TYPICAL APPLICATIONS

- Precision instruments
- Positioning systems
- Robotics

Anti-Backlash Gear

Exploded View

MADİSAN

SECTION 02

Power Transmission & Motion

Gearboxes, cams, lead screws and augers that convert and control motion — together with repair and overhaul services that bring industrial gearboxes back into operation.

20 Gearboxes & Transmissions 16

21 Gearbox Repair & Overhaul 17

22 Lead Screws 18

23 Cam Mechanisms 18

24 Cylindrical Cams 19

25 Augers & Screw Components 20

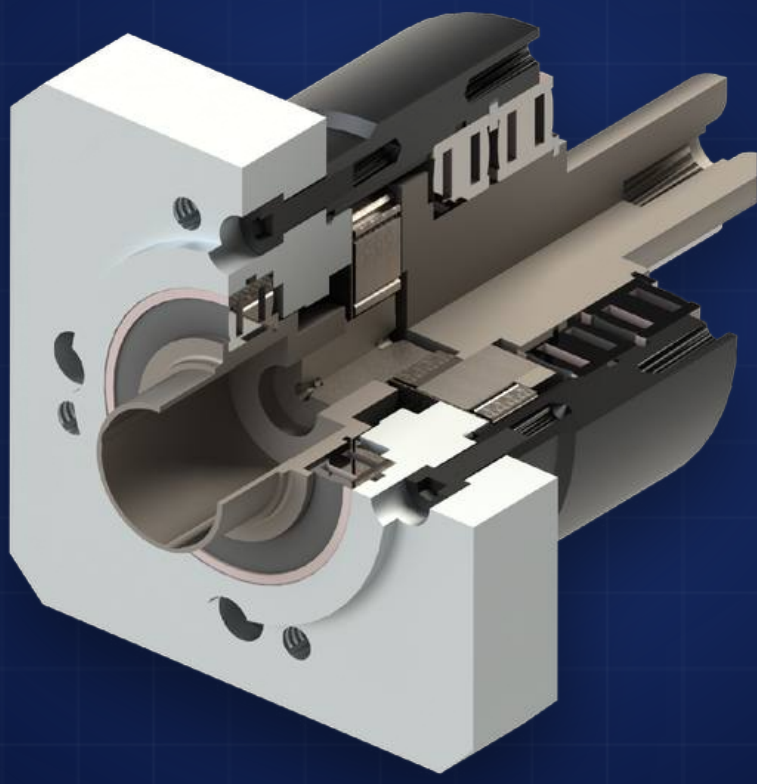

POWER TRANSMISSION & MOTION

20 Gearboxes & Transmissions

Speed reducers and transmissions — from precision planetary gearboxes to multi-stage industrial units — complete with their gears, shafts and housings.

TYPICAL APPLICATIONS

- Industrial drives
- Servo & automation systems
- Mixers & conveyors

Precision Planetary Gearbox

Planetary Gearbox — Section View

Gearbox — Section View

Multi-Stage Transmission

Planetary Gearbox Components

Transmission Housing & Gear Train

Planetary Gearbox — Exploded View

Gearbox Housing, Gears & Shafts

POWER TRANSMISSION & MOTION

21 Gearbox Repair & Overhaul

Inspection, repair and overhaul of industrial gearboxes and reducers. Worn or damaged gears, shafts and components are measured and re-manufactured, and units are rebuilt for a return to service.

SERVICE SCOPE

- Inspection & fault diagnosis
- Disassembly & cleaning
- Re-manufacture of worn gears & shafts
- Reassembly & final checks

Gearboxes received for overhaul

Planetary stage opened for inspection

Disassembled gear train

Vertical reducer

Planet carrier & housing

Units awaiting repair

Housing inspection

Planetary gearboxes

22

POWER TRANSMISSION & MOTION

Lead Screws

Threaded screw shafts with flanged nuts that convert rotation into precise linear motion for positioning and lifting.

Lead Screw with Flanged Nut

Lead Screw — Reverse View

TYPICAL APPLICATIONS

- Linear actuators
- Lifting & adjustment systems
- CNC & 3D printer axes

Grooved Plate Cam

Plate Cam Disc

23

POWER TRANSMISSION & MOTION

Cam Mechanisms

Plate cams, grooved cams and eccentric shafts that generate precisely defined motion profiles for followers and linkages.

Eccentric Shaft

Eccentric Cam Shaft

TYPICAL APPLICATIONS

- Packaging & assembly machines
- Presses & feeders
- Engines & compressors

POWER TRANSMISSION & MOTION

24 Cylindrical Cams

Barrel cams with helical and cross-over grooves that convert rotation into reciprocating linear motion — in steel and engineering plastics such as POM and cast polyamide.

TYPICAL APPLICATIONS

- Traverse & winding units
- Textile machinery
- Pick-and-place systems

Cross-Groove Traverse Cam POM

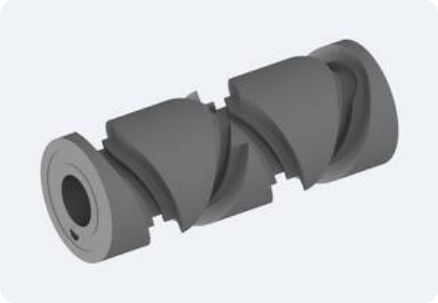

Double-Track Cylindrical Cam

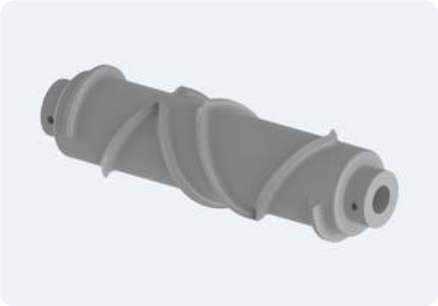

Large Barrel Cam POM

Short Cross-Groove Cam

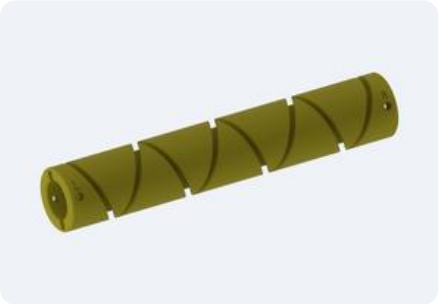

Barrel Cam PA6

Traverse Cam POM

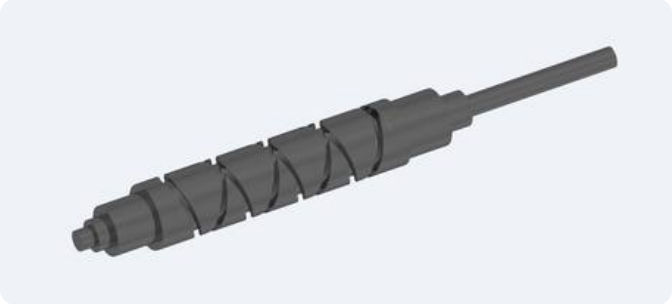

Traverse Cam with Shaft

Helical Groove Cam POM

POWER TRANSMISSION & MOTION

25 Augers & Screw Components

Auger flights, feed screws and extruder screws for conveying, dosing and plasticising — together with related threaded housings and screw assemblies.

TYPICAL APPLICATIONS

- Screw conveyors
- Dosing & filling
- Plastic extrusion

Tapered Auger

Auger Flight Shaft

Screw Conveyor Auger

Threaded Screw Housing

Helical Screw Element

Screw & Housing Assembly

Extruder Screw

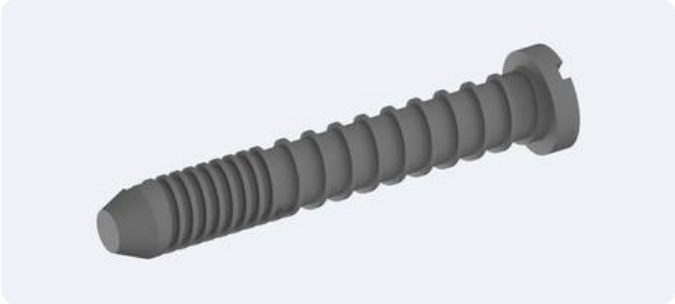

Coarse-Thread Feed Screw

SECTION 03

Pump Systems

Gear, lobe, centrifugal and liquid ring vacuum pump series for transfer, dosing and vacuum duties across the process industries.

26	External Gear Pumps	22
27	Internal Gear Pumps	23
28	Rotary Lobe Pumps	24
29	Centrifugal Pumps	25
30	Liquid Ring Vacuum Pumps	26

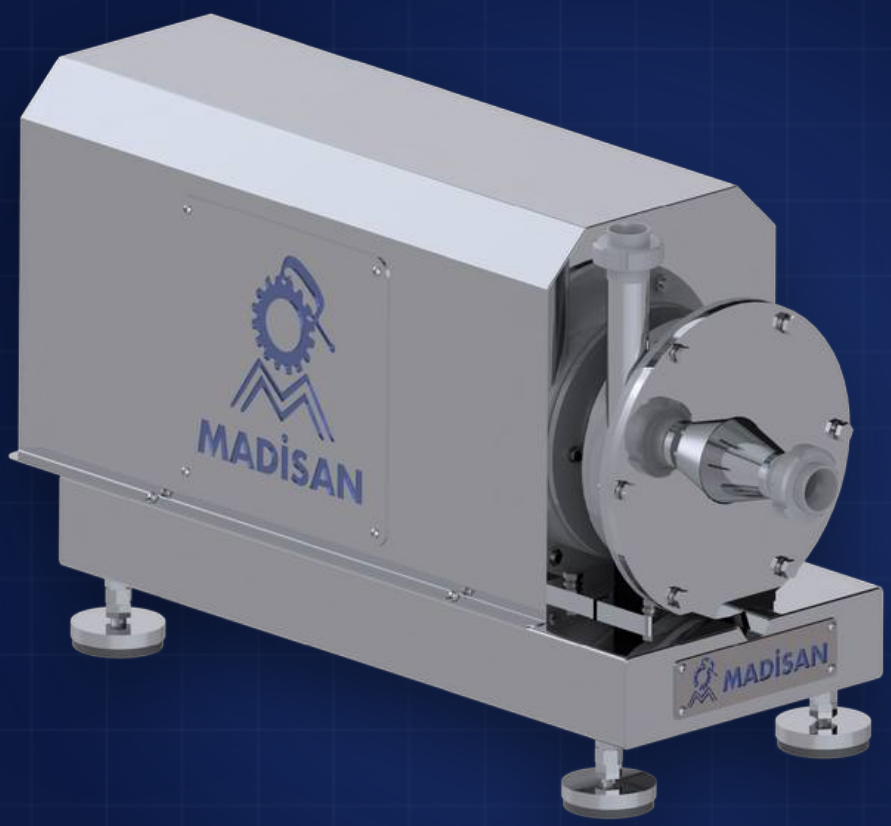

PUMP SYSTEMS MDP-C SERIES

26 External Gear Pumps

Positive-displacement pumps with two meshing external gears for smooth, even flow. Available in compact block design, as foot-mounted versions and as servo-driven dosing units.

TYPICAL APPLICATIONS

- Oil & lubricant transfer
- Chemical dosing
- Viscous fluids

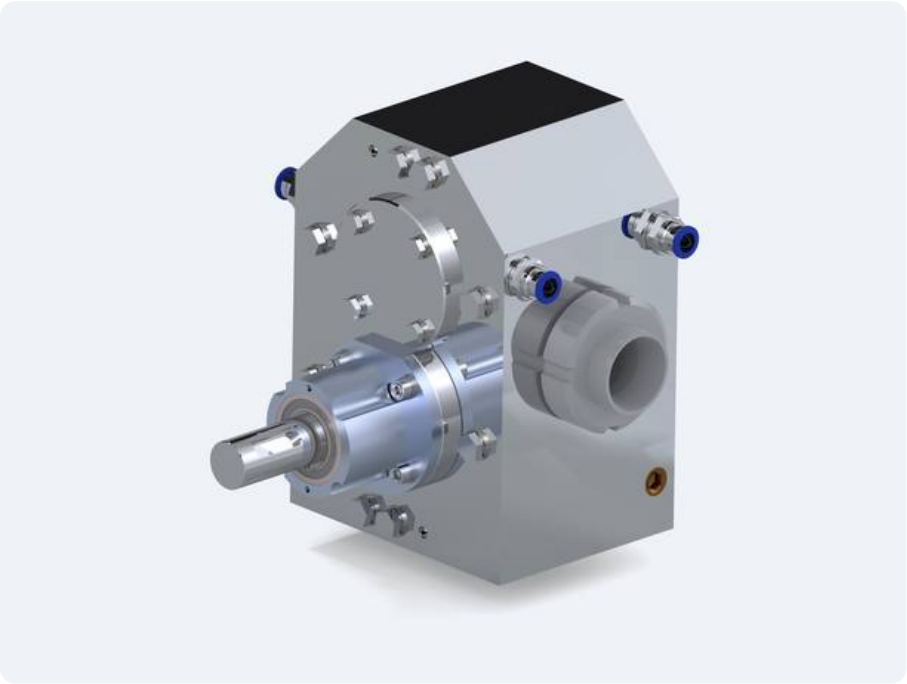

MDP-C External Gear Pump

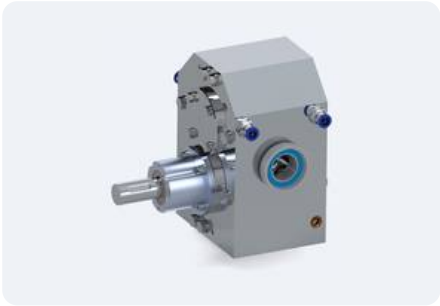

MDP-C — Drive Side

MDP-C — Rear View

Foot-Mounted Gear Pump

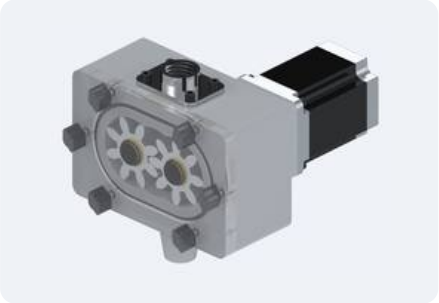

Servo-Driven Gear Pump

Gear Pump Components

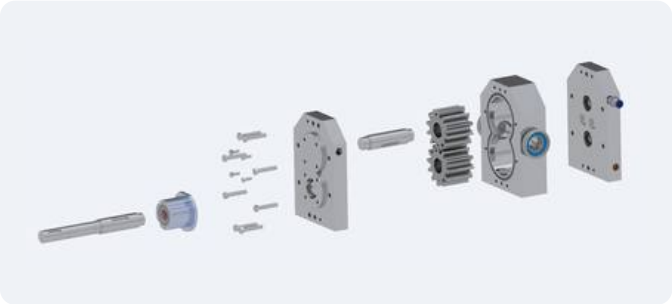

MDP-C — Exploded View

Pump Body & Gear Set

PUMP SYSTEMS MIP SERIES

27 Internal Gear Pumps

Rotor-and-idler internal gear pumps in stainless steel construction for gentle, self-priming transfer of thin to highly viscous liquids.

TYPICAL APPLICATIONS

- Food & beverage
- Chemicals & solvents
- Syrups, oils & resins

MIP Internal Gear Pump

MIP — Side View

MIP — Threaded Connections

MIP — Drive End

Rotor & Idler Gear

Compact MIP Pump

PUMP SYSTEMS MLP SERIES

28 Rotary Lobe Pumps

Lobe pumps with non-contacting rotors for low-shear handling of viscous and particle-laden products — MLP-C motor-driven units and compact, servo-driven MLP-E models.

TYPICAL APPLICATIONS

- Dairy & food processing
- Cosmetics & pharmaceuticals
- Sludges & slurries

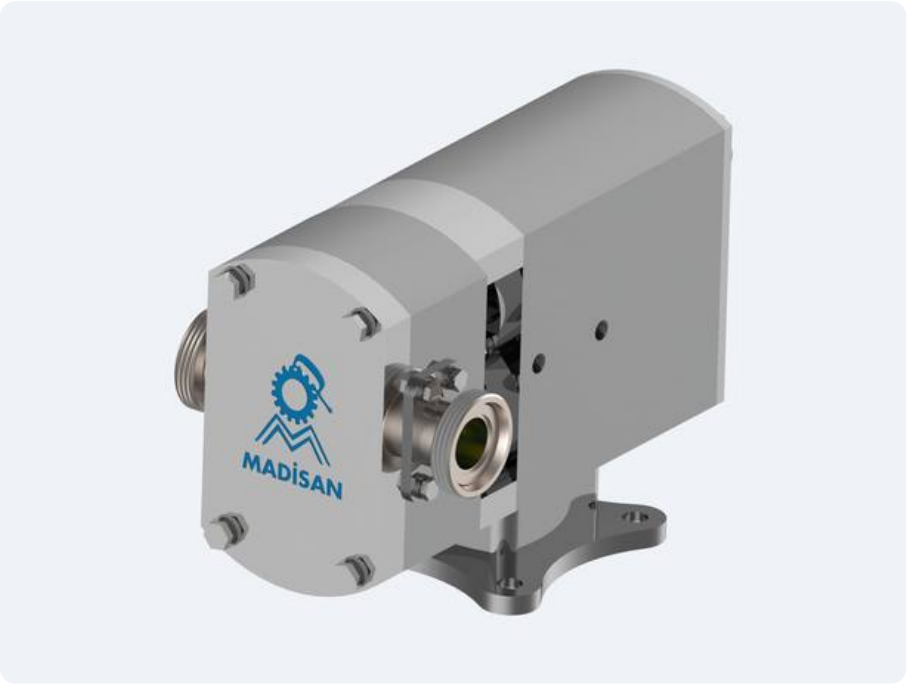

MLP-C Rotary Lobe Pump

MLP-C — Side View

MLP-C — Motor-Driven Unit

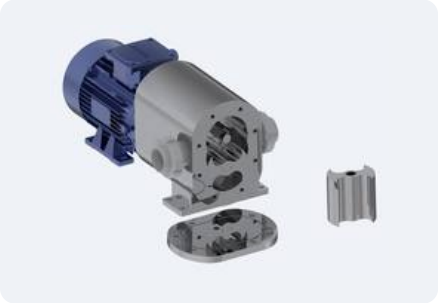

Rotor Chamber, Cover Removed

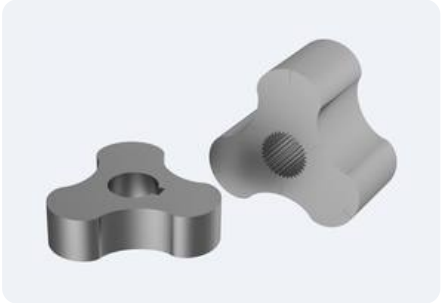

Tri-Lobe Rotors

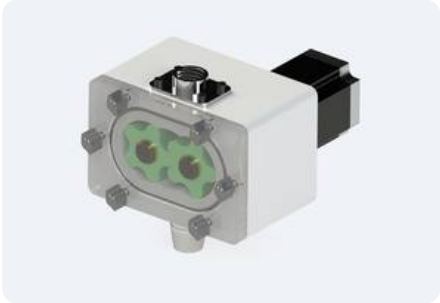

MLP-E Compact Servo Lobe Pump

MLP-C — Exploded View

MLP-E — Front Cover Open

29 PUMP SYSTEMS MSP-C SERIES

Centrifugal Pumps

Stainless steel centrifugal pumps on a covered base frame with motor shroud, for efficient transfer of low-viscosity liquids in process and cleaning lines.

TYPICAL APPLICATIONS

- Beverage & dairy
- CIP cleaning systems
- Water & process liquids

MSP-C Centrifugal Pump

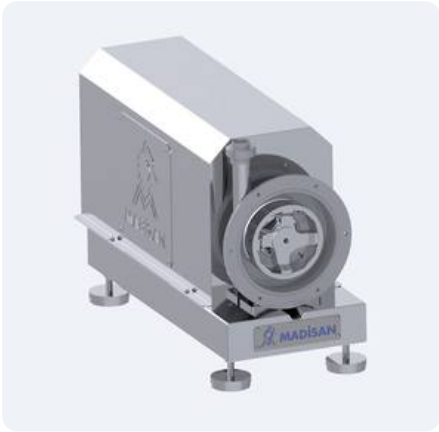

MSP-C — Front View

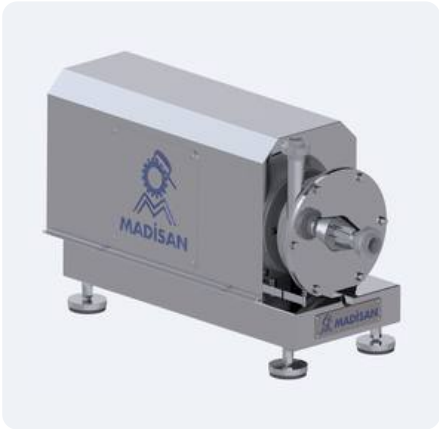

MSP-C — Angled View

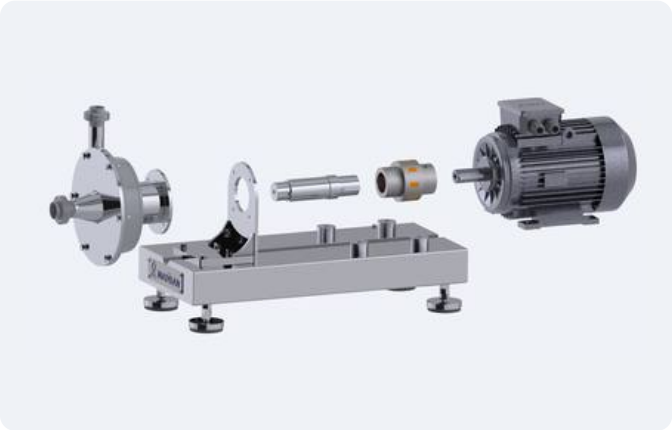

MSP-C — Exploded View

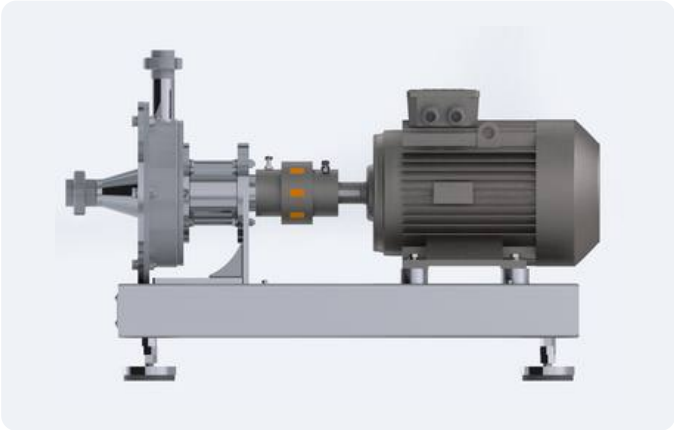

Pump & Motor Assembly

PUMP SYSTEMS MSHVP-P SERIES

30 Liquid Ring Vacuum Pumps

Liquid ring vacuum pumps with near-isothermal compression and high tolerance to vapour and condensate — supplied as bare-shaft pumps or close-coupled motor units.

TYPICAL APPLICATIONS

- Vacuum filtration & drying
- Degassing
- Chemical & plastics processes

MSHVP-P Liquid Ring Vacuum Pump

MSHVP-P — Red Finish

MSHVP-P — Side View

Pump & Motor, Separated

MSHVP-P — Exploded View

Bare-Shaft Pump

Close-Coupled Motor Unit

MADİSAN

SECTION 04

Tooling & Machining

Pattern moulds, extrusion and press dies, and custom CNC-machined components made to customer drawings — from single parts to series production.

31 Pattern Moulds 28

32 Extrusion Dies 29

33 Press Dies 29

34 Custom Machined Parts 30

35 Housings, Brackets & Assemblies 31

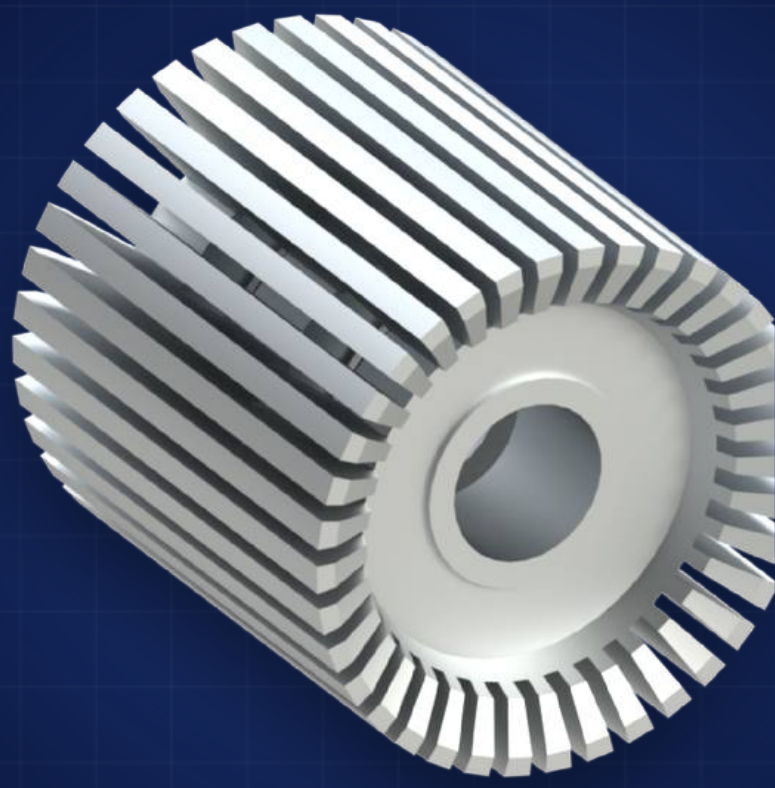

TOOLING & MACHINING

31 Pattern Moulds

Pattern and embossing moulds, master models and toothed profile tools, machined for moulding, forming and casting processes.

TYPICAL APPLICATIONS

- Rubber & polyurethane moulding
- Embossing
- Foundry patterns

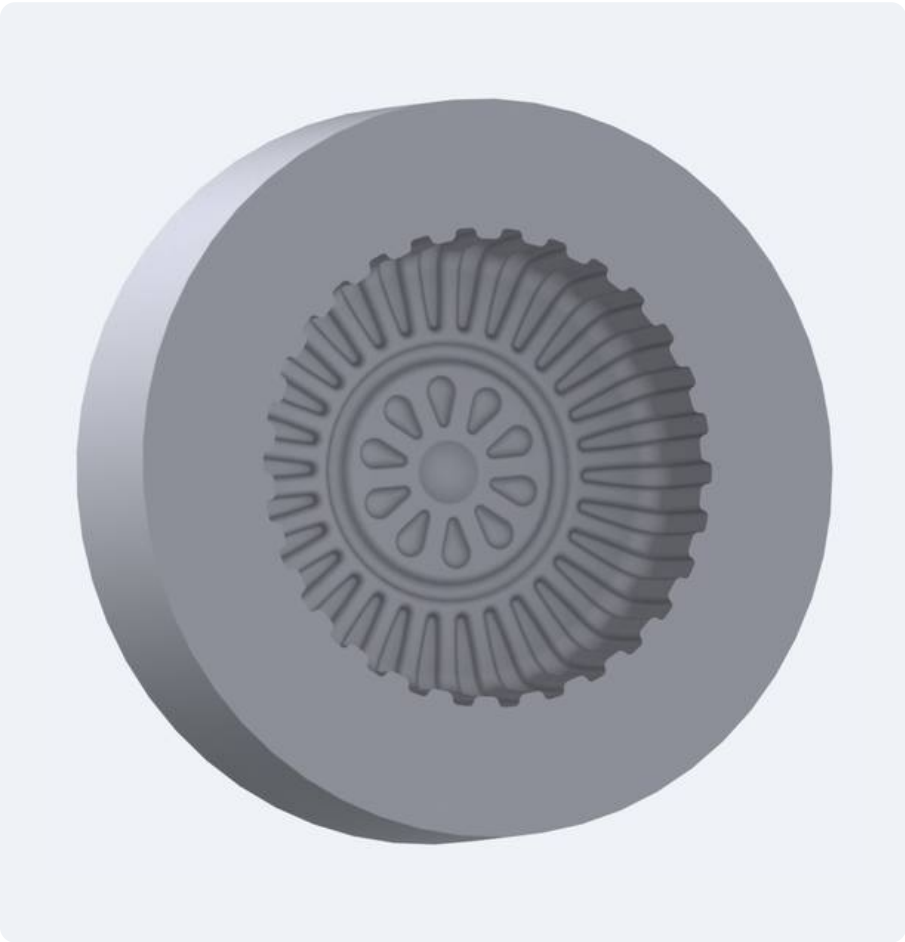

Embossing Pattern Die

Coupling Spider Pattern

Sprocket Pattern

Toothed Pattern Plate

Profile Pattern Bar

Slotted Pattern Bar

32

TOOLING & MACHINING

Extrusion Dies

Extrusion die plates and die blocks machined for consistent, repeatable profile geometry.

Extrusion Die Plates

Extrusion Die Block

Die Block — Front View

TYPICAL APPLICATIONS

- Plastic & rubber profiles
- Food extrusion
- Pelletising

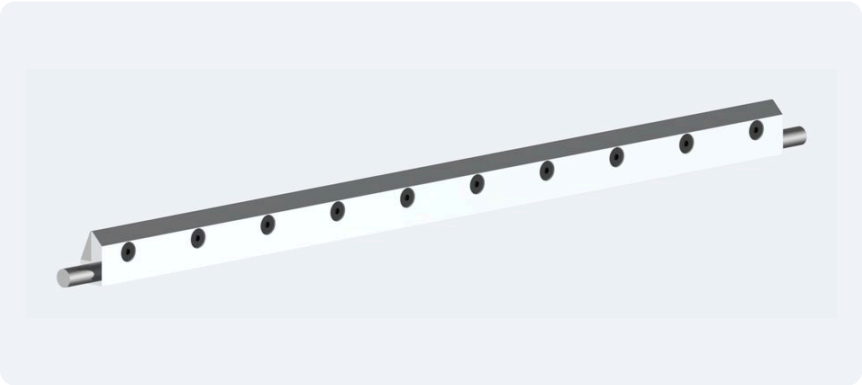

Perforating Die Bar

33

TOOLING & MACHINING

Press Dies

Punches, die bars and forming tools for stamping, piercing and bending sheet metal parts.

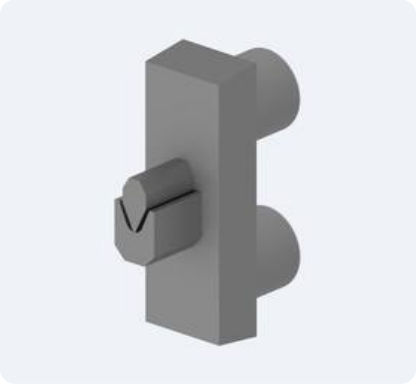

Forming Punch Block

Punch Bar

TYPICAL APPLICATIONS

- Sheet metal stamping
- Piercing & perforating
- Bending & forming

TOOLING & MACHINING

34 Custom Machined Parts

Precision turned and milled parts made to customer drawings — in aluminium, steel, stainless steel, brass and engineering plastics, from single pieces to series production.

TYPICAL APPLICATIONS

- Machine building
- Automation
- Automotive & agriculture
- Spare parts

Machined Coupling Housing

Helical Beam Coupling

Aluminium Clevis Block

Stepped Precision Shafts

Manifold Blocks with Bushings

Aluminium Flange Plate

Turned Steel Discs

Finned Aluminium Block

Aluminium Housing Block

TOOLING & MACHINING

35 Housings, Brackets & Assemblies

Bearing housings, hubs, brackets and complete sub-assemblies — engineered in 3D CAD and manufactured to specification.

TYPICAL APPLICATIONS

- Machine frames & housings
- Motion assemblies
- Sealing systems
- Prototypes

Steel Roller Hub

Machined U-Bracket

Bearing Block Housing

Radial Fin Heat Sink

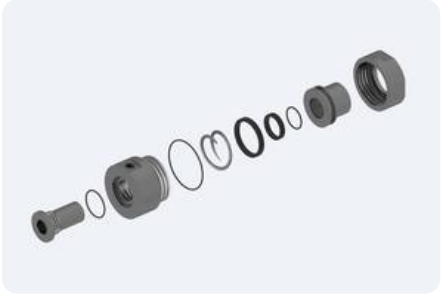

Seal Cartridge Assembly

Steel Cam Segment

Sheet Metal Bracket

Split Polymer Guide Ring

Star Mounting Plate

MADİSAN

GEARS · POWER TRANSMISSION · PUMP SYSTEMS · TOOLING

GEARS | POWER TRANSMISSION & MOTION | PUMP SYSTEMS | TOOLING & MACHINING